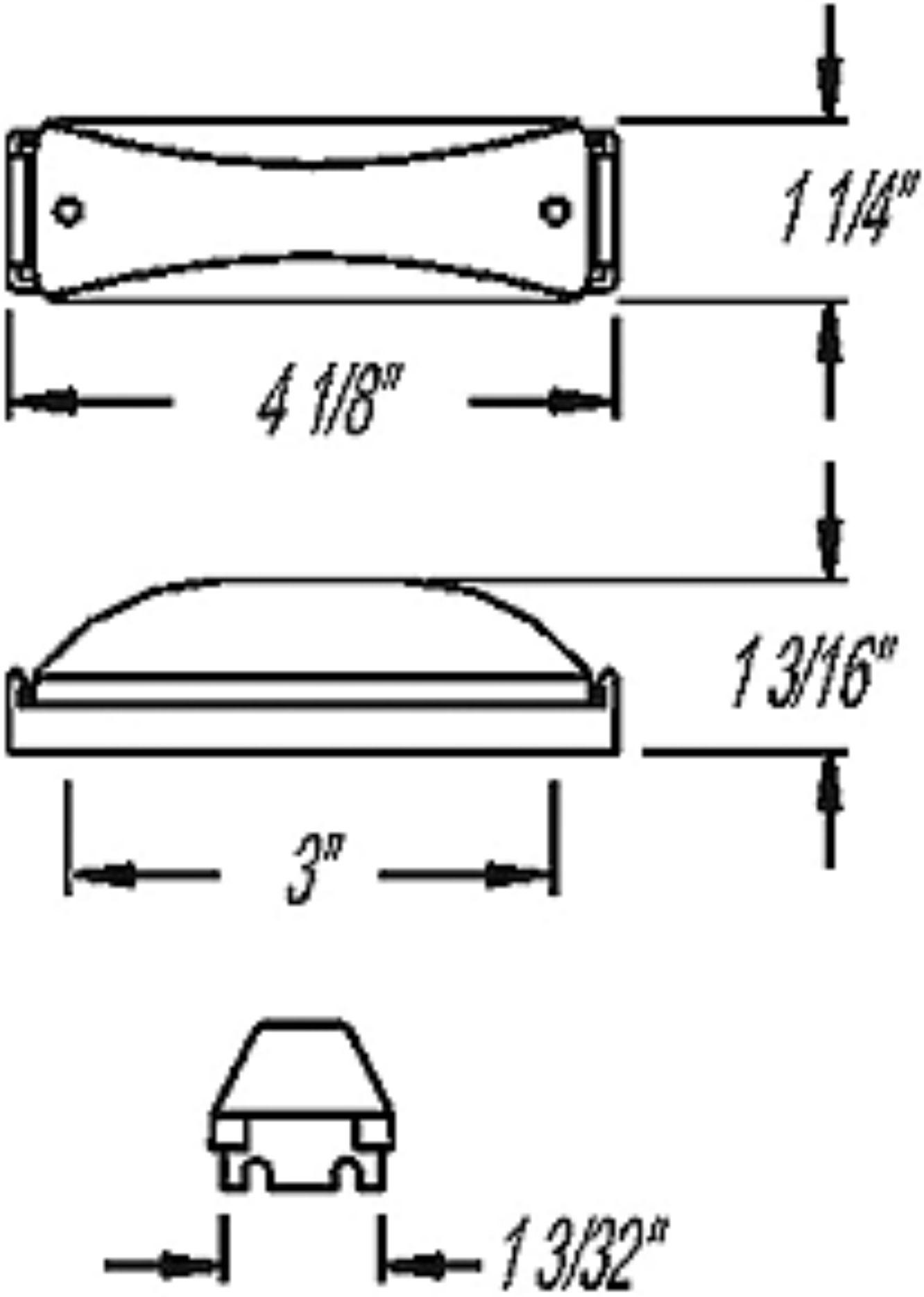
1 1/4"
4 1/8"
1 3/16"
3"
1 3/32"