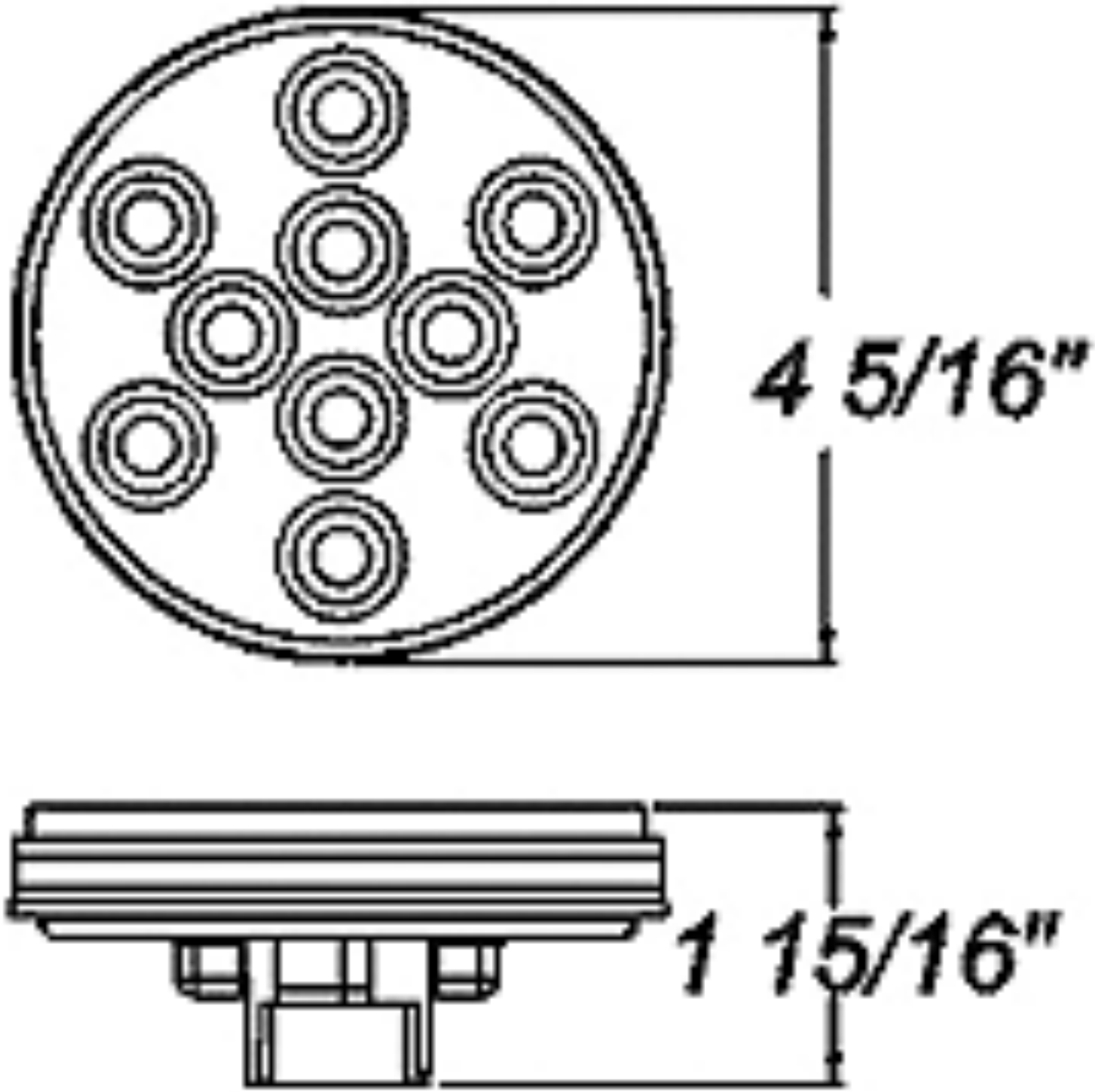
4 5/16"
1 15/16"