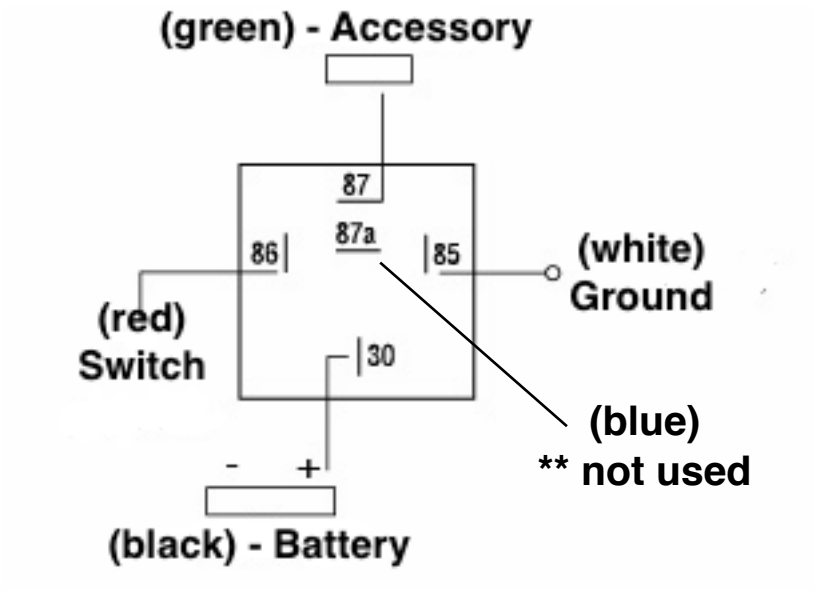
(green) - Accessory
87
87a
86
85
(white)
Ground
(red)
Switch
30
(blue)
** not used
-
+
(black) - Battery